Self-Directed Work Teams — The Ultimate Empowerment

Robert B. Austenfeld, Jr.

(Received on October 12, 1999)

1. Introduction

The purpose of this paper is to describe what a self-directed work team is, why it is "the ultimate empowerment," how to go about setting up such a team, and the stages in the team's development. I first learned about such teams in 1995 during a conference on quality[1)] in Illinois. A side feature of the conference was a tour of the FEL–PRO company to see one of its self-directed work teams. This company makes heavy-duty gaskets and the team we visited was responsible for producing certain types on, as best I can recall, about four different machines. The team's "self-directedness" was readily apparent from the first since we were placed completely in its hands; various members did all the briefing and answered questions about what they did. I remember towards the end of this visit we did have a chance to meet with the team's "supervisor" but she said all she did was do whatever she could to support the team.

I think one reason I was particularly impressed was a former experience I had at a large aerospace company[2)] that was attempting to "empower" *its* workforce. The overall program was called the Total Quality Management System (TQMS) and is described in Austenfeld (1994). The long and short of this TQMS effort

1) The 50th Midwest Quality Conference, September 13–15, 1995, Schaumburg, Illinois.

2) McDonnell Douglas Corporation's Douglas Aircraft Company in Long Beach, California. McDonnell Douglas has since been acquired by Boeing Company.

was that it failed. In fact, after about a year into the program, management published a white paper ("Getting in Sync," 1990) trying to explain what empowerment meant. There seemed to be a lot of confusion about whether empowerment meant just turning things over to the worker or what. Of course the problem, as explained in the white paper, was that empowerment can't come without a carefully laid out and executed cultural transformation based mainly on training. And the training had to be directed at both those assuming the additional duties and, maybe even more important, those giving them up. Without this training, the tendency is for supervisors to begin relinquishing their duties to subordinates too soon and subordinates trying to grapple with duties for which they are not prepared. Such a situation leads to frustration on both sides and usually results in the supervisors simply giving up and resuming their prior autocratic style to "get the job done." I think had the company considered the self-direct work team (SDWT) approach it may have had much more success.

This paper is organized as follows:

- What is a Self-Directed Work Team (SDWT)?
- Some Extracts From a Day In the Life of a SDWT.
- What Are the Advantages of a SDWT?
- How is a SDWT Formed?
- What Skills and Knowledge Must a SDWT Possess?
- What Are the Stages of a SDWT's Development?
- Conclusion

As will soon be noted, there is a heavy reliance on Wellins, et al. (1991). This excellent book is based on extensive experience with SDWTs and information gained from two surveys: one targeting SDWTs and those directly involved with such teams, and another targeting senior executives (primarily in manufacturing).

2. What is a Self-Directed Work Team (SDWT)?

Wellins, et al. (1991) define a SDWT as "an intact group of employees who are responsible for the 'whole' work process or segment that delivers a product or service to an internal or external customer" (p. 3). In perhaps plainer terms, a SDWT is a group of typically about a dozen people (could be more or less, of course) who are permanently dedicated to producing some product or providing some service and who essentially manage themselves. Such a group is distinguished from other teams in that they continue to exist rather than being formed up for some special purpose and then being disbanded once that purpose is fulfilled. Another distinguishing feature is the amount of autonomy the team has. As the team matures, it can take on more and more of the responsibilities normally held by higher-level mangers. For example, a mature SDWT might deal directly with its customers and suppliers, hire and discipline its members, and develop it own operating and capital improvement budgets.

A SDWT also is different from traditional teams and work groups in that each member is often able to perform several, if not all, of the team's jobs. In SDWT talk this is called "multiskilling" and provides the team not only a great deal of flexibility but is a great unifier since each member fully appreciates what each job entails. On top of this, the *modus operandi* of most SDWTs calls for rotation of jobs so that members feel they are being treated equally; i.e., one member can't say he or she is always stuck with the most boring or menial tasks. Multiskilling also increases the member's confidence as he or she becomes more broadly skilled. We will have more to say about the advantages of a SDWT in section 4 of this paper. For now let's turn to a typical SDWT as described by Wellins, et al. (1991).

3. Some Extracts From a Day In the Life of a SDWT

Wellins, et al. devote Chapter 4 in their book to describing a day in the life of a typical, well-established SDWT. The six-person team works for a large American cheese producer and is responsible for a highly automated operation that produces bulk cheese. To further characterize the SDWT, several extracts from Wellins, et al. follow with comments. The following sets the scene:

> "It's 6 A.M. Monday at the plant. The Green Team — six associates in hairnets — comes in to relieve six workers on the Silver Team who have just put in a long night. Each team works a twelve-hour shift, seven times every fourteen days. There is little ceremony in the shift change, *and there are no supervisors* [emphasis added]."

Comment:

- The members are called "associates" not "workers" or "hey you." That is, they are respected as professionals in the same way a senior manager might be shown respect.
- There are no supervisors, the shift change is completely between the teams themselves.

> "Each team uses large handwritten master logs — forms that team members designed themselves — to keep track of its run performance."

Comment:

- SDWTs are encouraged to develop their own methods for organizing and monitoring their work.

> "Larry has the highest technical ratings, so it's interesting to see him rolling up his sleeves for a day of manual labor"
>
> "Like all others, Ed is taking his turn in the rotation: three days in the lab.... Everyone learns to operate this room ... just as everyone learns to push barrels around."

Comment:

- All six members know all the jobs from the fairly technical one of running the lab to what Larry's doing today: making, filling, and palletizing cardboard barrels.
- The jobs are rotated among all members including the team "communicator" role, the closest thing the team has to a supervisor.

"Ed's role as communicator shifts to the next team member every month. Until about a year ago, team leadership was supported by personnel outside the team called 'team advisors.' Now the team assumes those responsibilities, mostly through the communicators...."

Comment:

- The assumption of more leadership responsibility is a gradual thing based on the team's ability to handle it as the team becomes more experienced in self-direction.

"Bobby decides to start the UF cleaning [a special cleaning required for some of the equipment] early when he finds a broken relief valve."

"Ted, their newest team member, offers his help. So does Steve from the support team and Sonny, the team's dedicated maintenance person, who suggests they take extra time now for the thorough UF cleaning that Maintenance sought. They agree, and another level of cleaning begins."

Comment:

- The team and even individual members make almost all the decisions relating to their work process. The process is so well defined that Bobby knows he can unilaterally make the "UF cleaning" decision.
- The ideal SDWT member not only is trained to help out without being asked but is "that kind of person" to begin with (e.g., Ted offering to help).
- Notice the close and effective relationship the team has with the plant's

support and maintenance personnel.

"A bulletin board in the room reports the last period's cumulative turnaround times, nonconformance figures, some pH incentive results, sanitation incentives (various measures for keeping within parameters), plant milk consumptions, and evaporator carry-over loss,. among other things."

Comment:

- SDWTs place a high premium on setting goals and then measuring and displaying (publicly) how they are doing.

"[Associate Larry speaking] 'What I like best is the input I can give to management. When I have an idea, it's a direct shot. I feel that no one knows my job better than I do and no can do it as well as I can. So when I'm asked what the best thing is to do, it's a stroke to my ego.'"

Comment:

- Management must also change by not only letting go of many of its traditional prerogatives but by treating team members as professional equals and soliciting their advice on the best way to do things. Given this attitude and appropriate training, the team will more and more be encouraged to make or suggest improvements on its own.
- A hallmark of SDWTs is the pride they take in their work.

"Employees are used to talking openly. They continually communicate bout their work every day on the job, as well as in an array of team meeting opportunities."

Comment:

- There is a complete openness with regard to what's going on. The team and all with whom they associate are conditioned to share what they know through numerous (but well run) meetings.
- They members find their work interesting and challenging and worthy of

their constant attention. Compare this with the all to typical worker who finds himself often thinking about what he will do at home or elsewhere after he has finished the "temporary distraction" of work.

"[Associate Bobby speaking] 'We've all been trained on how to interview.'"

"Judy Robinson, the plant's personnel manager ... comments on the plant's hiring practices. 'I'll have people in the human resource field say to me, 'You mean your *employees* do the interviews?!' I say back to them, 'You mean your *managers and supervisors* do!?!'"

Comment:

- It is not uncommon for SDWTs to do their own hiring and they are trained in appropriate skills such as proper interviewing.

"When asked about how careful the team was in selecting members, Bobby says that only about 20 percent of the general population would qualify to work in the Green team situation. 'Eighty percent wouldn't have the attitude we need.'"

Comment:

- Not everyone is cut out to be a SDWT member; selection is very important.

"[Tim speaking about the consequences of a shutdown or "being out of spec"] It's as if he owns the company — he's an entrepreneur, chef, scientist, troubleshooter, and teacher all in one. He talks about how this problem is likely to affect overall performance for the day, week, and quarter. The evaporator shutdown results in a loss of nine to ten dollars a minute. 'Being out of spec,' he adds as he records the occurrence on his log, 'also means less incentive payout.'"

Comment:

- SDWT members are trained in business management and are given information that would normally not go below upper management.

Again, they are being treated as professional equals with a stake in not just how well their team runs, but the company as a whole.

- The compensation system must also be changed to appropriately reward SDWT members for the added value they surely bring to the company.

Now that we've taken a closer look at a real SDWT (thanks to Wellins, et al.) let's turn to something we've already touched on: the advantages of a SDWT.

4. What Are the Advantages of a SDWT?

Drawing mostly on a list provided by Wellins, et al., these are some of the advantages of a SDWT:

- Improved quality, productivity, and service.
- Greater flexibility.
- Reduced operating costs.
- Fewer, simpler job classifications.
- Better response to new worker values.
- Ability to attract and retain the best people.

Let's consider each of these briefly.

Improved quality, productivity, and service. In the process of developing a good SDWT, it will undergo extensive training in: how to operate as an effective team, process improvement, goal setting, measuring performance, etc. All of these skills plus the team's feeling of ownership of their product or service will invariable bring about improvements in quality, productivity, and service. By its very nature, the SDWT is accountable for the quality of its work and the service it provides to its customers. There is no longer a supervisor whom the workers can "get into trouble" if they don't like him by shirking on their job. The environment of a SDWT is such that its work process is continually under review by the team and all members are trained and encouraged to make suggested improvements that can increase productivity.

Greater flexibility. This comes about in a couple of ways. First, since there is no single supervisor "in charge" any more, the company doesn't have to rely on that person so much to ensure a particular product or service gets properly produced. The team as a whole has taken on this responsibility and, even if a member is absent for some reason, the company can count on the team still doing the job. Second, as briefly mentioned in section 2, it is not uncommon for members of SDWTs to learn all the jobs associated with their team. This is the case with the example used in section 3 about the cheese production team; any of the six members could do any job from running the fairly technical lab to the mundane task of making barrels. Imagine the flexibility and robustness this gives the team. Not only are unplanned absences more easily handled, but so are things like vacation planning and absences due to temporary outside assignments. Of course there are the other benefits of such an arrangement such as increasing the member's value and confidence, and a greater feeling of togetherness that comes with knowing everyone's job and the rotation of those jobs.

Reduced operating costs. Imagine not needing a "high paid" supervisor for every work group and having a highly motivated team that has been trained to constantly improve its work process. Of course this doesn't mean the team itself shouldn't receive additional compensation for the value they are adding to the product or service. But, given the high performance of a fairly mature SDWT, the overall operating costs are bound to decrease. Take for example a manufacturing team described in Rollo (1995). The team obtained detailed information about all the costs associated with their product and then built some of their goals around how well they could reduce specific costs.

Fewer, simpler job classifications. With a normal work group there would usually be a series of very detailed job descriptions all rigorously developed and annually reviewed by the personnel department and, very possibly, the union too. Along with such regimentation, would come the scrutiny of the union and

the workers themselves to be sure everything they did was "in the job description." With the SDWT, such rigor is not necessary. The relationship between the SDWT and management moves from a Taylor[3)] type of relationship to one of trust. With that trust, comes the tremendous advantage of lower "transaction costs"; that is, less need to spell out everything the worker does. In fact, with SDWTs the ideal is to *not* spell things out too much so the members can do "out-of-the-box" thinking and be truly innovative in improving the work process. As for the unions, according to a study cited in Wellins, et al. (1991), there is generally a positive response to adoption of SDWTs. However, it is recommended that the union be brought on board early in the planning stage so it doesn't feel like something is being forced on it.

Better response to new worker values. Certainly from an American perspective, the old days of the "Protestant work ethic" are long gone. Today's workers want to be more involved in the planning and decision-making and not just work for the sake of working. Beginning with the famous Hawthorne studies and the now classic works of people like Maslow, Herzberg, and McGregor, it is well accepted that workers respond better to a management style that respects them as individuals and seeks to develop and use their full potential. The SDWT fits in very well with this cultural change. In fact, as a SDWT matures, it takes on more and more of the traditional management responsibilities and worker involvement in planning and managing the work process becomes almost complete. SDWTs have been likened to a mini-business allowing the free expression

3) Fredrick Taylor is known as the "Father of Scientific Management" and, in the early 1900s, was responsible for an approach to work that said each job must be carefully analyzed and each worker trained to do just that job in a prescribed "scientifically correct" way. The worker was considered inherently lazy and it was management's job to design jobs and treat the worker in ways that would overcome this "laziness." Naturally, the worker was also considered to have nothing to offer intellectually and was not expected to do any thinking; just do the job as directed by management.

of the entrepreneurial spirit.

Ability to attract and retain the best people. It clearly follows from what has just been said about better response to new worker values that SDWTs will attract that "new breed" of workers who truly want more out of a job than just a paycheck. Of course, the SDWT is not for everyone since there are still those who would rather operate in a highly structured "just tell me what to do" environment for a regular paycheck. But as the rewards for taking on the additional responsibilities, both material and intangible, increase and become more apparent, more and more workers will opt for this type of job. Especially this will be true for SDWTs given the opportunities they afford for self-improvement and self-expression. As expressed by one highly satisfied SDWT member:

> Where I came from, you couldn't trust people to be here all night by themselves and do the job. When I got here [and into a SDWT] I knew that this was just up my alley. I don't need a boss looking over my shoulder because I know how to do the work. It never made sense to me to see grown-ups standing around watching other grown-up do their jobs. I could see it if you were fourteen years old. But I'm an adult. (as quoted in Wellins, et al., 1991, page 73).

Of course all these specified benefits add up to a better bottom line. There are many case studies that have demonstrated the efficacy of using SDWTs. For example LBL Consulting, Inc. (www.lblconsulting.com/articles.html) describe the success of SDWTs at Sun Microsystems Computer Company (Milpitas, CA). Sun's Failure Analysis Department had worked for years in trying to reduce the large number of failed computer boards waiting to be worked on (dubbed "the bonepile"). At any one time there were usually over a thousand "bones" in the pile. A new manager reorganized the department into SDWTs and established a "breakthrough goal" of "No Bonepile"; here are the results:

- The bonepile dropped by 45 percent within three months and, within a year, from 1,144 boards to only 45. By the end of the next quarter it had dropped to zero and has remained there since.
- Board cycle time was reduced from an average of 30 days to one or two days.
- Operating costs were reduced by 83 percent.
- Debug cycle time was reduced by 56 percent.
- Incorrect diagnosis dropped by 80 percent.
- There was a 50 percent reduction in the number of people needed.

Indeed these are impressive figures but not untypical when SDWTs are carefully formed and used.

5. How is a SDWT Formed?

There are three key sets of players for forming a SDWT: senior management, a steering committee, and a design team (Wellins, et al., 1991). Let us look at the responsibilities of each.

Senior management. Of course the decision to form a SDWT will be senior management's. However, before making such a decision several things must be considered such as the organization's mission (sometimes called a "vision") and values, how well SDWTs will fit in with this mission, and what specific contributions to the bottom line management expects from using SDWTs. Wellins, et al. places great stress on developing a good mission statement and set of values as the first step. Of course a well run company would already have done this but, as is too often the case, many companies haven't given sufficient attention to this matter. It may even be worth having a special off-site meeting of key personnel to brainstorm and come up with a good mission statement and set of values. Appendix A shows a good example such a statement and set of values.

Once the mission and values have been clearly determined, the role of a

SDWT within such a mission can be considered. It is important to realize that every organization may not "right" for SDWTs. To help make this determination, management should ask itself some key questions such as those shown in Appendix B. As it becomes clearer that SDWTs may be a good investment, management should be more specific in listing exactly what it expects to gain from such an investment[4]. For example, what are some of the direct benefits expected, such as improved cycle times or reduced scrap rates? Also, what about the indirect benefits expected such as improved morale and lower employee turnover rates?

Having duly considered all these matters, senior management will make a decision to either go or not go with SDWTs. If the decision is to go with them, then the next step will be to establish a steering committee. It would also be a good idea to concurrently hold some sort of all-hands "kick-off" meeting to explain what SDWTs are, the rationale behind the decision to use SDWTs, and how the company will probably be affected.

The steering committee. The steering committee's primary responsibility is to provide general guidance to the design team and act as a conduit between senior management and the design committee. That is, should either senior management or the design team wish to communicate with the other, it will be funneled through the steering committee. The steering committee should be made up of the following: senior managers for that part of the organization where the SDWTs will be used, functional managers that will have some important role in interacting with the future SDWTs[5], union leaders, and, if useful, directly involved first-line supervisors and employees (e.g., future team

4) And it *is* an investment; launching, nurturing, and maintaining SDWTs will require a lot of management attention and patience, especially during the early stages.

5) For example, if the maintenance department will be relied on heavily by the SDWTs, then a manager from that department should be on the steering committee.

members).

Some of the specific responsibilities of the steering committee are:

- In association with senior management, to clarify and communicate the organization's mission and values.
- To develop the charter for the design team, spelling out its purpose and importance and, in general, how it should conduct its business (e.g., meeting frequency, with whom it can communicate directly, a tentative schedule for completion of various phases of its work, etc.).
- To act as an interface with the rest of the organization in terms of finding out the needs of the organization and ensuring all organizational policies are either adhered to or proposed for change in line with the use of SDWTs.
- To ensure the design team is shielded from outside interference. In other words should someone have a problem with what the design team is doing, they would be required to take it to the steering committee for consideration.
- Finally, in general, to support the design team in any way it can.

All this is not to say the design will be working in some sort of isolated environment. In fact, as should be spelled out in its charter, the design team should have fairly broad authority to deal with other parts of the organization in accomplishing its job.

The design team. The main responsibilities of the design team logically divide into three areas: the actual design of the SDWT, the selection of team members, and the training of team members. Let's examine each area.

The actual design of the SDWT. During the actual design of the SDWT the design team must consider many things that, in general, fall into one of two categories: the technical aspects of the SDWT and the social aspects. The *technical aspects* include defining the SDWT's structure, boundaries, and tasks; the facilities and equipment required; how its performance will be measured; information requirements and sources of that information; where the team will

meet; and training required (Wellins, et al., 1991).

Technical aspects — structure, boundaries, and tasks/facilities and equipment. In determining the SWDT's structure and boundaries, the design team must ensure the team will be responsible for some complete product or service. This doesn't mean the team has to make "the whole car" for example; only that it can point to something and say "we made it (performed that service) and take full responsibility for it's quality." The SWDT's customer could well be internal; i.e., another part of the organization, even another SWDT. Once the SDWT's product or service is defined, all the tasks necessary to produce and deliver that product/service must be identified. The design team should flow chart[6] all the tasks into a coherent work process and do what it can to ensure that process is logical, contains no non-value-added activities, and has an optimal arrangement of facilities and equipment.

Technical aspects — performance measurement. Since one of the reasons for using a SDWT is to give it ownership of and responsibility for some important part of the organization's operation, it is imperative that a good system for measuring its performance be established. This would likely be a set of key indicators such as productivity, scrap rate, or customer satisfaction. Of course these can always be changed as time goes on and the SDWT gains more experience, but appropriate measures should be established and used right from the start.

Technical aspects — information requirements/sources. The SDWT will have greater responsibilities than the traditional work group and, therefore, will need access to more information. The design team must do a complete analysis of these information needs and have a plan for ensuring they will be

6) See Appendix C for an example of a flow chart. A flow chart let's you see a complete process from start to finish including all the decision points along the way. It is an excellent tool for identifying any non-value-added or illogical activities.

met. Actually this requirement is equally germane to the social aspects to be discussed shortly. That is, besides information relating to the technical aspects of job, there will be information needs associated with the day-to-day management of the SDWT. Rollo (1995) offers a technique for determining all SDWT interfaces and the information flows across those interfaces. Although his technique is written for use by the SDWT itself, it can certainly be adapted for use by the design team.

Technical aspects — where the team will meet. Although seemly a bit mundane, the design team should be sure the SDWT will have a good place to meet. There are some who would argue that meetings should be "few and far between" since they are perceived of as (and too often actually are!) time wasters. However, our SDWT will be trained to use meetings only as required *and efficiently*. Initially there will be a need for the SDWT to meet fairly often as the inevitable bugs associated with forming a SDWT emerge. Therefore it will be important to have a good place to meet; one that is convenient and affords a quiet environment.

Technical aspects — training. The success of the SDWT will probably depend more on how well it is trained than anything else. Accordingly, the design team must give a great deal of attention to this matter. The training will include job, team, and leadership skills. This is another requirement that is also germane to the social aspects of the SDWT. The various skills and knowledge required of the typical SDWT member will be discussed in section 6 below. A comprehensive training plan must be developed to include training not only for members of the SDWT but also for other people whose particular skills and knowledge will be critical in giving the SDWT the support it needs; for example, involved managers and support personnel. Appendix D shows such a plan in a somewhat general form. Note that this plan begins 12 months before the launch of the SDWT. This gives us some idea of the amount of effort that an organiza-

tion should expect to put into development of a SDWT if they want it to succeed. We shall have more to say about training at the end of this section.

In considering the *social aspects* of the SDWT we have to look at two things: what general management tasks will the SDWT be assuming and what specific functions that are presently performed by other parts of the organization will the SDWT begin doing.

Social aspects — general management tasks. Wellins, et al. (1991) envisions gradual assumption of the general management duties stressing that it is important to not load the team up with too many of these until it has obtain the requisite experience. According to Wellins, et al. a typical SDWT set up would include a *team leader* who assumes a nominal leadership role within the SDWT and a *group leader* who it not a part of the SWDT. The team leader position would rotate; for example the team leader ("communicator") for the cheese producing SDWT described in section 3 rotated every month. Initially the group leader would handle most of the "higher-level" management responsibilities for the SDWT such as, for example, making work assignments, ensuring work standards are met, making hiring decisions, and handling disciplinary problems. As the team becomes more experienced, these responsibilities would be taken on by the SDWT; in other words the group leader's role is to support the SDWT in a mentoring/facilitating way so that it will eventually lead itself.

Although some have suggested that these management responsibilities should be passed on to the SDWT as its self-leadership abilities naturally emerge, Wellins, et al. (and I strongly agree) recommend a definite plan be developed for assumption of specific management responsibilities. This way there will be no confusion about what is expected of the SDWT vis-a-vis the group leader. Furthermore, the SDWT's training can be planned to support the assumption of the additional responsibilities. For example, should one of the new responsibili-

ties be "hiring new team members," training in rating job candidates and interviewing can be scheduled shortly before the SDWT assumes this duty.

Social aspects — new functional responsibilities. The other thing to consider when looking at the social aspects of the design is what responsibilities will the SDWT take on in specific functional areas. For example, will the SDWT begin doing its own maintenance. If so, then the design team must consider whether to train members whose primary duties are not maintenance or to add one or more maintenance specialists to the team. Some other responsibilities that a SDWT might logically assume from other parts of the organization are: financial planning (e.g., doing their own budgeting), safety, training, quality assurance, and human resources (e.g., those relating to hiring, pay issues, and discipline). Again, a plan should be developed showing exactly which responsibilities the SDWT will assume when. Necessarily, the design team will have to work closely with the various functional areas in developing this transition plan. Again, the training plan must be harmonized with the transition plan. It will also be necessary for the design team to decide how these additional duties will be assigned within the team and, to the extent possible at that time, exactly what those duties are. Rollo (1995) calls these members "coordinators" and suggests the following as general responsibilities:

- Learn about their area of responsibility and provide feedback to the team on anything important.
- Be a communications channel to that particular functional area and work to improve communications.
- Serve on task forces related to that functional area.
- Be advocates for the needs of the SDWT.

Both Rollo and Wellins, et al. recommend coordinator roles be rotated about every three months so all team members become knowledgeable in all areas. Should a member be involved in some special project, those special project

responsibilities will simply pass to the new coordinator for that area; *not* remain with the prior coordinator.

The selection of team members. Having considered the chief points with regard to the actual design of the team, let's now turn to the second main responsibility of the design team: selecting members for the SDWT. The importance of making the right decisions on who will be on the SDWT cannot be overstressed. As Wellins, et al. (1991) express it:

> Many teams have discovered that good selection is a critical and often irreversible part of the [forming] process. If the team is inadvertently stacked with dysfunctional members, it will be difficult to change their behavior or remove them from the team without disrupting the cohesiveness of the team. (page 144)

Given its importance, it is well worth the effort an organization puts into team member selection and the design team should either be directly involved or, as a minimum, develop a comprehensive selection plan. Such a plan should have two parts: (1) job analysis and (2) assessment. When speaking of the "job" in job analysis we are referring to the entire set of responsibilities that a SDWT member would be expected to assume.

Job analysis. The purpose of the job analysis is to develop a set of what Wellins, et al. calls job dimensions. For example, an obvious dimension for a SDWT would be teamwork. Other dimensions might be: ability to learn, initiative, ability to analyze, ability to communicate effectively, etc. Once all the applicable dimensions have been identified by considering the requirements of the entire "job," they are carefully described and used as a set of assessment criteria. Appendix E, a another example from Wellins, et al., shows how such a dimension would be described. As far as understanding all the requirements, if the SDWT is taking over some existing work process, the design team can use incumbents to get a good understanding of the job and, even, questionnaires and

direct observation. If the work process is new, then it will be necessary to do some envisioning of what the job would entail by talking with people who are expert in that particular area.

Assessment. Once the dimensions of the job are identified and described the design team needs to consider how those dimensions will be assessed for candidate team members. Wellins, et al. suggests using a series of assessment methods since no one method can adequately assess all dimensions. Some of the methods suggested by Wellins, et al. are:

- *Problem-solving simulations* — the candidate is given some problem to solve that might be typically encountered and access to an information resource. The candidate must make some decision about the problem within a set amount of time.
- *Manufacturing simulations* — the candidate might be placed in a group that must make important planning and resource allocation decisions.
- *Group discussion simulations* — the candidate is placed in a group with nonassigned roles and the group is asked to solve some typical problem such as a worker continuing to come in late.
- *Application form* — the application form should be built around the dimensions of the job.
- *Video orientation* — the purpose of the video is to show candidates what they can realistically expect if they are selected for the SDWT. Often candidates are shown only the "good" side of being on a SDWT and, once on it, become disillusioned when faced with fitting into a culture they were not expecting. This part of the assessment allows candidates to self-select themselves out of further consideration.
- *Cognitive ability test* — this test can help determine a candidate's "basic judgement, perception, and psychomotor skills."
- *Self-report inventory* — this assessment tool can help determine a

candidate's suitability to work in a SDWT environment. For example, one "agree/disagree" question might be: Managers and employees can solve problems by talking to each other.

- *Technical skills test* — this would be for determining the extent to which a candidate can handle the various tasks of the SDWT. Recall the various tasks *all* the members of the cheese production team (described in section 3) had to know. Of course, the results of this assessment must be considered in light of what one could reasonably expect a candidate to know now and what will be learned later through formal or on-the-job training. The test could be both written and "hands-on."
- *Targeted interviewing* — by this, Wellins, et al. mean: the interview should focus on the dimensions, ask about actual relevant past experience, elicit concrete (versus theoretical) information about the candidate's abilities (exactly what can you do now!)[7], and use more than one interviewer to gain different perspectives.

Once several different methods of assessment have been considered, they should be listed along one axis of a matrix with the dimensions along another. Then the design team should determine for each dimension just which method or methods will be used. This way, any gaps or excessive redundancy can be eliminated. Some redundancy is probably OK but the important thing is to be sure all dimensions are adequately assessed.

As part of its selection plan, the design team should ensure the group and team leaders are selected first so they can be involved in selection and training of the SDWT members. Also, you don't want to be in a hurry making these critical selections which might be the case if you put them off. As Wellins, et al. (1991) point out:

> Unfortunately, one of the most common regrets expressed ... is that [the

7) All this without hurting the candidate's self-esteem.

organization] did not use a more rigorous selection process in choosing their leaders. Too often senior managers either think that they instinctively know who will make an empowering leader or believe that the leader's technical and organizational expertise is more important that other job-related dimensions. (page 155)

The key here is to apply the same rigor, if not more, to group/team leader selection as just outlined for member selection. This means, however, that the dimensions might have to adjusted to account for the additional responsibilities expected for these positions. It should be kept in mind that the "team leader" we're talking about here will be the *initial* holder of that position; all other SDWT members will be expected to eventually fill that role.

Some things to be aware of with regard to the selection process are:

- Once a SDWT is up and running, new selections should involve the SDWT members since they will have a vested interest in getting good new members.
- Do all you can to present a realistic picture to the candidate of what he or she will be getting into. There is no reason to continue processing someone who feels they won't fit into the SDWT culture.
- Realize that more time and money may be required than for traditional selection processes. The type of candidate sought is someone often quite different from the average worker in terms of initiative and motivation. Wellins, et al.'s experience has been a selection ratio of about 20 to 1 for SDWTs.
- Be sure to allow enough time for a thorough assessment and still have the people on board when needed. Crash assessments inevitably result in a lowering of standards and/or a failure to make a complete assessment of all dimensions.
- Consider how to handle those not selected. They should be dealt with openly and have the selection process explained to them and why they were

seen not to "fit" the SDWT environment.

The training of team members. The last main responsibility of the design team is to ensure a good training plan exists. Having already developed a set of dimensions for the job the SDWT will do, the training plan can and should build on these to be sure it is consistent with all job requirements. Appendix D, already mentioned, is an example of a generalized training plan. The question here is how does the design team determine what training to give the SDWT and others associated with the SDWT?

As the training plan in Appendix D shows, there are three groups that need to be considered: (1) managers, group leaders, and key support members; (2) team leaders; and (3) team members. Recall that the *group leader* is the person outside the SDWT who will be its nominal "manager" until it can self-manage and the *team leader* is the person inside the SDWT who will be acting as the primary coordinator for team activities. The team leader role will rotate among all members once the team is up and running.

The first group, the managers, group leaders, and key support members, will normally be trained first and as much as one year prior to start-up. The training for this group will concentrate on "higher-level" issues such as ensuring a good understanding of the SDWT concept, the organization's mission and values, and matters relating to supporting the empowerment of the SDWT. In the latter category would be training in such areas as team building and organizational development[8]. Training for this group will also include things like how to

8) Organizational development (OD) seeks to analyze an organization's "health" in terms of how well its members are working together to achieve its goals, and then come up with an action plan to correct any dysfunctional behavior. One classic OD intervention is to have two groups who must work together meet and tell each other how they really see the other group. Such an intervention can often clear up many misunderstandings but, due to the sensitivities involved, must handled with care so as not to make things even worse.

handle disciplinary matters, the need to trust the new SDWT (and, thus, let go of selected traditional managerial prerogatives), and how to be a good coach. The support personnel also must understand that how they interact with the team will be key in terms of letting it grow through the assumption of more of the support responsibilities; they also must be trained in "letting go."

The team leader who will first "lead" the SDWT will receive essentially the same training as the SDWT but before the rest of the members so he or she can help with the member training and also be in a position to answer questions the new members will inevitably have. Team leader training will also emphasize facilitation and coaching skills. However, it is important to remember that this team leader position will rotate so eventually all members will need the same training.

The specific training that should be given to all members of the SDWT can be broken down in two ways: a core set of knowledge and skills that all members receive at the outset and follow-on training for new knowledge and skills as needed. This latter training has been referred to as just-in-time training since ideally it is delivered shortly before the member will put it into use thus making its application as efficient as possible. Falling into the latter category would also be the on-the-job (OJT) training (or cross-training) that ultimately results in all SDWT members knowing how to do all the SDWT's tasks. To track such training a cross-training matrix similar to Appendix F — again drawing on Wellins, et al. — should be maintained. Such a matrix should be on display so everyone knows just who can do what tasks and how much progress is being made towards the ultimate goal of everyone being able to do everything.[9] With

9) Of course, there is one exception to having everyone know all the tasks and that is when there are tasks so specialized that only someone professionally trained can accomplish it competently; for example, an engineer or a medical doctor who might be part of a SDWT.

such information readily available, it will be easy to decide on assignment adjustments when someone is unavailable for some reason. As shown in the legend on the Appendix F example, this training is accomplished by having one member work closely with another until he or she is competent to do the task. A reasonable amount of time should be allocated for members to work with another member to learn the new task (e.g., two hours each week).

The training plan example given in Appendix D concerns the more formal training that will cover learning tasks that apply to completely new jobs[10] or relate to things like safety or maintenance plus all the other skills specific to an effective SDWT. Wellins, et al. categorize these as: job skills, team/interaction skills, and quality/action skills. Note that Appendix D doesn't get very specific. To remedy this, let's take a closer look at these skills.

6. What Skills and Knowledge Must a SDWT Possess?

Following the suggested categorization of Wellins, et al., we will now consider what specific skills/knowledge the SDWT should know. First, job skills[11]. I would also add one other category which will be addressed following these three; to wit: business skills.

Job skills. Under this category would come the following:

- Equipment operation
- Production or service processes
- Safety procedures
- Maintenance procedures

Job skills — equipment operation. If the new SDWT is simply a recasting of an existing work group, then these skills would most likely be learned through the OJT cross-training program. However, this sort of training would probably

10) As opposed to those that might be already existing and learned through OJT training.

11) When we use the word "skills" it is meant to also include "knowledge."

be required for a start-up operation[12] where all or some of the equipment may be new to the SDWT members. Also, considering the inherent dynamic nature of the SDWT and its mandate to continuously improve, it is most likely that the team will be taking advantage of any new technology and this may mean new equipment that requires training.

Job skills — production or service processes. One of the design requirements for a new SDWT is the design of its work process. The SDWT will, no doubt, have a new work process on which training will be required, even if it is transitioning from an existing, traditional work group. Also, as the SDWT comes up with better processes, these may require some amount of training.

Job skills — safety procedures. The SDWT will be expected to handle all routine safety requirements plus it may well assume additional responsibilities from the safety department such as doing some of the inspections the safety department would normally have carried out.

Job skills — maintenance procedures. The SDWT may well take on a lot more of the maintenance responsibilities. This would be in keeping with its general nature to be as self-sufficient and responsible as possible. As with safety, the team will need to be trained in proper maintenance procedures.

Team/interaction skills. Under this category would come the following:

- Communications
- Meetings
- Team dynamics
- Conflict management
- Training

Team/interaction skills — communications. This category would include

12) A start-up operation is simply one where no previous operation existed. For example, when a new factory is placed into operation or a new branch of some service organization is created.

such things as active listening[13], clearly expressing oneself, giving feedback, negotiating, and obtaining the agreement of others.

Team/interaction skills — meetings. Since a lot of the team's interaction will take place in meetings these skills deserve special consideration. Some of the skills are quite simple yet important such as having an agenda, *following* the agenda, how to bring the subject back to the agenda, providing adequate notice of the meeting and what it will cover, and starting and ending the meeting on time. All these things will ensure the meetings are efficient and not just "time wasters" that would soon become burdensome to the members. There should also be training on the more "advanced" meeting skills such as handling meeting "dominators" and "recluses"; that is, those who either talk too much during the meeting or who don't talk enough. In general the training should cover how to handle all the possible problems that might arise in a meeting. A good reference for this is Scholtes (1988). Also, since meetings are where most decision will be made, training in consensus decision making will be needed. Meetings are also where tough problems will be tackled but these "problem solving" skills will be discussed under the quality/action skills category.

Team/interaction skills — team dynamics. It will be important for the members of the new SDWT to understand how teams develop and the internal dynamics of members interacting with each other. For example, the members should have a thorough grounding in the stages of team development (to be discussed in the next section). This way they will not be so discouraged when it seems the whole team is "falling apart" (Stage 2, the "storming" stage). Under

13) Active listening is listening that seeks to really understand what the other person is saying. It means doing such things as paraphrasing back what's been said to see if that's what the other person meant, and asking for clarification when necessary. Active listening is opposed to the sort of listening that normally occurs; that is *passive* listening where the listener is usually thinking about what he or she will say next instead of what the other person is saying.

this set of skills would also fall: setting norms[14], how to tactfully address a member's failure to follow these norms, the advantages of diversity, and the importance of everyone pitching in when necessary (versus the traditional "that's not *my* job" attitude).

Team/interaction skills — conflict management. This is defined by Wellins, et al. (1991) as "Identifying and resolving conflicts and disagreements within a team, with another team, or with a supplier or client" (page 169). Of course there is much written on this important subject but the essence of conflict management is knowing how to let differing views be aired and resolved without destroying relationships. Speaking in terms of the SDWT itself, Chang & Curtin (1994) express it this way:

> Team members must learn to manage their differences, and to encourage a healthy disagreement without letting conflict destroy cooperation. Successful teams explore differing opinions and work through conflict in a way that allows each member to feel understood and respected. (page 96)

Covey's famous *The 7 Habits of Highly Effective People* (1989) provides a lot of good information for managing conflict and, another skill already mentioned, negotiating.

Team/interaction skills — training. Since training is so much a part of what makes a successful SDWT, its members need to be trained in how to do it well. This is because, at a minimum, each member will be expected to train others on his or her particular job. Beyond this, as the team becomes more mature, it is reasonable to assume that members will be required to perform

14) Although not discussed much here, it will be extremely important right from the start for the team to commit to a specific set of written norms. These will then provide the basis for how the team behaves and make it obvious if a member is failing to behave as expected. Without such explicitness, the team will develop norms but they may not be very "high-minded," may not be completely understood—especially by new members, and will not provide an unambiguous yardstick for correcting deviant behavior.

formal training in other areas such as team and quality skills. Basic instructional techniques can be taught such as developing a lesson plan, setting learning objectives, good delivery methods, and effective testing.

Quality/action skills. Since the ultimate purpose of having SDWTs is to have a team in place that will, on its own, continuously improve its product and service, knowing these skills is essential. An excellent reference for most of these skills is Tague (1995). These skills might logically be grouped as follows:

- Problem solving skills
- Process improvement skills
- The use of statistics

Quality/action skills — problem solving skills. This set of skills is necessarily intertwined with the process improvement skills since solving a problem is often also going to improve your process. However, there are some problems that simply suddenly arise and must be dealt with without regard to the process. Some of these skills are: brainstorming, nominal group technique, root-cause analysis, and use of the fishbone diagram.

Quality/action skills — process improvement skills. In this case we are deliberately trying to improve one of our SDWT processes. Again, many of the problem solving skills, such as those just mentioned, can also be used. Also statistics will no doubt play a big part in process improvement. However, here the training should concentrate on overall techniques for process improvement such as flow charting the process (see Appendix C), considering optimum facility/equipment arrangements, the Plan, Do, Check, Act (PDCA) cycle[15], and

15) The PDCA cycle is also known as the Deming or Shewhart Cycle, named after two early quality experts who first promoted its use. In short, the cycle requires one to first *plan* some sort of improvement, next put the improvement into practice — maybe on a pilot basis (*do*), then *check* how well it worked, and finally adapting the improvement by emphasizing what worked and discarding what didn't (*act*). The cycle is then repeated.

the use of benchmarking[16].

Quality/action skills — the use of statistics. Underlying all process improvement efforts must be an understanding of statistics, at least to the extent that SDWT members will be able to appreciate their importance. Granted a trained statistician may be required to properly select and initially apply the correct statistical techniques. However, the team members themselves can then be trained to use the techniques for understanding and controlling the variation in their processes. For example, a statistician can teach the members how to use a control chart[17] for monitoring one or more of its processes and how to interpret the results of the plot in terms of what action should be taken. A knowledgeable statistician can also ensure that the SDWT is using the latest and best statistical tools for their particular processes.

Management and business skills. This category is added because the SDWT is really like a small business and will become more so as its members gain experience and mature. It is necessary for the SDWT to work with its customers and suppliers, understand how its operation fits in with the company's overall strategy, realize the financial impact of how well it performs or doesn't perform, be able to do budgeting, take on personnel management tasks, etc. Accordingly, some of the skills and knowledge required here are:

---

16) Benchmarking is the study of another organization's similar processes to learn how to make your's better. See Austenfeld (1996) for a full treatment of the subject.

17) A control chart allows the process owner to methodically chart how well his or her process is performing. Using mathematical formulas and data gathered from the process (e.g., how far the product deviates from some ideal standard), a set of upper and lower "control limits" can be established. Then, with periodic sampling, the owner can always tell if the process is "under control" or not and, when it isn't, take appropriate action. For example, once the control limits are set and the sampling shows a significant number of "products" have deviated outside one of the control limits the owner can use problem-solving techniques to isolate the cause and remedy the problem.

- Understanding the company's business
- Setting and measuring goals
- Finance
- Personnel
- Project management
- Leadership skills

Management and business skills — understanding the company's business. This training should cover such things as the company's history, mission, vision, business strategy, goals as they impact the SDWT, competitors, and key success factors for the industry and how they relate to the performance of the SDWT.

Management and business skills — Setting and measuring goals. Essential to any operation's success is having challenging, measurable goals. Here the team needs to understand how its performance goals flow downward from the overall business strategy. Thus, it can appreciate the importance of knowing how to set and measure good goals and how meeting those goals will directly impact the success of the company's strategy.

Management and business skills — Finance. This training should include such things as how to make and manage a budget, how to propose new capital expenditures, and any other skills that might be appropriate to that particular SDWT (for example, developing an activity cost chain[18)] for its product or service).

18) An activity cost chain breaks down a production process into its smallest cost identifiable parts; e.g., the cost of each input to the process, the cost of each discrete production operation, and the cost of storing and/or delivering the product/service to the user. Once the breakdown is accomplished, the individual costs can be compared with those of a similar operation (especially a competitor's) to see if they are reasonable. Also, the individual costs can be tracked against established goals to reduce these costs by making the buying, operation, or delivery systems more efficient.

Management and business skills — Personnel. As the team matures and become more self-sufficient it will take responsibility for more and more of its personnel matters. Accordingly, this training needs to address such things as good hiring practices (screening candidates, interviewing, selection, etc.), handling disciplinary problems, performance appraisal, and recognition.

Management and business skills — Project management. For some teams the nature of the work will be (or include) relatively large projects that begin and end; for example, a team responsible for printing services or writing computer programs. It will be important for such teams to know how to set up and manage such projects so they are accomplished efficiently without the need for higher level intervention.

Management and business skills — Leadership skills. Since the SDWT by nature, "leads" itself this is also essential training. It is likely that there will be a rotating team leader who not only *occupies* that position must also know how to *act* like a leader. This doesn't mean being "bossy" but knowing enough about human nature and motivation to be an inspiration to the team and keep it focused on its primary mission.

Although all these skills may seem overwhelming at first glance, when one considers what is expected of a SDWT, they all make sense. Also, it should be remembered that the training is not something that happens all at once but will go on continually. Ideally, after the team has been given a core set of training it will then move on to additional training as needed depending on its stage of development. A well thought out training plan such as suggested by Appendix D is the key to a well trained and effective SDWT. Now it is time to consider one last thing about SDWTs and that is how they develop once formed.

7. What Are the Stages of a SDWT's Development?

There are four classic stages of team development: forming, storming,

norming, and performing. Appendix G, taken from the OnePine web site, provides a generalized summary of these four stages based on the work of B. W. Tuckman. Wellins, et al. (1991) calls these stages[19]:

- Stage One: Getting started (forming)
- Stage Two: Going in circles (storming)
- Stage Three: Getting on Course (norming)
- Stage Four: Full speed ahead (performing)

Let's consider each one in terms of how one would characterize the SDWT at that stage and ways to help the team move through that stage.

Stage One: Getting started — characterization of the team. At this stage the team is really still just a bunch of individuals. There is little trust between members simply because they don't know each other well yet. Although the team will get on with its work and training and, ostensibly, be "working together" there is a lot of underlying concern about things like: what am I doing here?, what is (or should be) my role?, why is he/she the "leader"?, etc. After the initial excitement of doing something new that has, no doubt, been highly anticipated, there may be a let down as the members begin to realize it is not all "a rose garden"; especially since they have yet to learn many of the skills needed to work as an effective team. Also there may be some stress due to taking on a lot of new and unfamiliar duties. There will be a lot of reliance on whoever is acting as the group leader (team advisor) and there may be tendency to fall back on the "old way" of doing things.

Stage One: Getting started — helping the team at this stage. Wellins, et al. suggest having the team write their charter. Although a lot of the information about what the SDWT does or doesn't do will already have been spelled out by the design team in the implementation plan, it is probably a good idea to have

19) Rollo (1995) calls them: (1) organization and familiarization, (2) separation and dissension, (3) reformation and harmonization, and (4) performance and recognition.

the team take ownership of things like its values and norms which could be incorporated into a charter.[20] Rollo (1995) offers a technique for developing behavior norms and expectations (Chapter 3). The charter could also be a means for clarifying the various roles that the team needs to fulfill and how they will be allocated among the members. To help with this effort the design team should provide the team with a complete explanation of the implementation plan and continue to make itself available to answer any questions.

It will be important for the team to continue its training both formal and OJT cross-training. If possible, the team may benefit from visiting other SDWTs that have already gone through this stage and see how they weathered the problems. It is also a good idea to have a means for members to vent their early frustrations and to know that these are normal feelings. Finally, whoever is guiding the team should ensure it is not being asked to do things that are beyond what it has been trained for which would make the inevitable frustrations even worse. This could cause a major set back in "selling" the members on the merits of SDWTs.

Stage Two: Going in circles — characterization of the team. Tuckman calls this the "storming" stage and, indeed, this is what now characterizes the team. The pretense of working together as "one happy family" gradually drops and real feelings about each other begin to surface along with previously hidden agendas. Symptoms of this condition are: personality clashes, finger pointing, staunchly defended opinions and, in general, an "I" (versus "we") attitude. In addition to this, the team, which may have been working together for six months or so, is now expected to take on more and more responsibilities but hasn't matured enough to completely do so. Wellins, et al. liken the SDWT at this stage

20) The charter would also contain a lot of the information already developed by the design team and provide a vehicle for the SDWT to affirm (or, even, challenge) this information.

to a "maturing teenager seeking autonomy" — the members are expected to be a well functioning social unit when they have yet to fully master the social and procedural skills necessary for this.

Stage Two: Going in circles — helping the team at this stage. Rollo emphasizes the need for the group leader to not be too quick to step in. At this stage it is important for the team to work out its problems on its own if it is to mature. Although the "storming" stage is a difficult one it is necessary if the team is to ever develop correctly because it forces the team to honestly face all its internal conflicts. The team must be made to understand this so they don't look at it as something unnatural and become too discouraged. Again, the design team should continue to work with the SDWT so it knows where it's headed and that it is still on course. The group leader must encourage the team to rely more and more on those things it has now been trained in: how to engage in constructive feedback, conflict management, proper problem-solving procedures, running an effective meeting, appreciating diversity, etc. It will also be good at this somewhat discouraging stage to find even small accomplishment that can be rewarded to bolster the team ebbing feelings of self-worth.

Also, there is nothing wrong with reexamining the team's norms, values, expectations, and roles that were developed in the first stage; especially since the team has had a chance to test these over the last six months or so. Training must also continue and should be geared to the SDWT's special needs during this stage such as running a good meeting, managing conflict, learning how to support others, appreciating diversity, and the use of explicit problem-solving (or whatever) procedures (versus simply "ad hocing it").

Stage Three: Getting on course — characterization of the team. Typically, this stage might occur after a year or so but, as with all stages, will vary greatly depending on the team. Just as the gangly teenager seems to suddenly emerge as a reasonably level-headed adult, the SDWT emerges from

the throes of the "storming" stage to the "norming" stage where the team's real norms are finally established and embraced. Here many of the once hidden issues have now been surfaced and, in one way or another, dealt with. Team members begin to really know and appreciate one another in a new and better way. The advantages of working as a team are becoming more apparent and each member's ability to provide a unique contribution is more appreciated. The old "I versus we" is being replaced with a "we versus I" and members are beginning to really trust one another reciprocating even more trust and a feeling of camaraderie. Things are more relaxed. There is more concern with simply getting the job done versus worrying about who responsibility it is to do what. Agreed upon procedures are being used and believed in more and more instead of "ad hocing" things. Although still primarily focused inwardly, the team will now begin focusing more and more on its external partners and clients. This means it will begin working with its suppliers/customers and taking on more work including some that was previously done by other parts of the organization—e.g., some of the maintenance tasks. The cross-training is now proceeding apace making the team just that much more robust and flexible. All in all, this is a time of rapid growth towards greater unity, maturity, and collective self-confidence.

Stage Three: Getting on course — helping the team at this stage. The group leader must do what he or she can to encourage the team to take on more responsibilities. This can be done by simply delegating more and more of the "leadership" responsibilities that the group leader has been doing. Also the team needs to be encouraged to establish even more communications with their suppliers, customers, and support elements in accordance with the implementation plan worked out by the design team. Training should concentrate more and more on "advanced" issues such as those dealing with business, interpersonal, personnel, and support issues. Wellins, et al. suggests that now is also a good

time to consider if the compensation system is such that it reinforces team cohesiveness.

Stage Four: Full speed ahead — characterization of the team. With constant attention and nurturing, the team will eventually become truly "self-directed" and high-performing. In fact, it now moves from simply doing its job as a cohesive and well-functioning unit to being *proactive*. It will seek even more work and responsibility and want more say in the running of the company's business. In fact, the ideal is to move the whole company towards "self-direction" but that is a big jump and its discussion beyond the scope of this paper. This new found identity of being its own boss and feeling competent to call the shots within its area of expertise is the essence of self-direction and should be encouraged. In fact, anything that tends to limit this proactiveness will cause the SDWT to revert to its less productive ways. Just as "eternal vigilance is the price of freedom" so is it the price of keeping the SDWT high-performing. It will be up to the group leader to continue to turn over more and more responsibilities to the team while, at the same, time ensuring it takes these on in a systematic and reasonable way; that is, not assuming too much before it is ready from both a training and experience point of view. In this regard it is important to have a plan that shows which responsibilities the team will assume and, tentatively at least, when. Finally, the group leader and management must provide continuous support to the SDWT to not only keep it functioning well but to move it to every higher levels of performance.

8. Conclusion

From what has been discussed in this paper it would seem any company that wants to improve its performance and the morale of its employees should consider the use of SDWTs. It is noted that the company I visited in 1995, was

rated among the best companies in America to work for[21]. By just visiting and briefly talking with its employees one could feel a sense of pride in their involvement with the business of the company. In fact, it was not "the company" but "our company" and they were proud of it and their contribution. From all the research that has been done over the last fifty years on what motivates workers it would seem the use of SDWTs represents the best application of those theories and, truly, can be called the ultimate empowerment when done correctly. Success will surely go to those companies that are able to quickly restructure themselves and that have employees working to constantly improve each part of the operation. The modular approach that SDWTs offer and the very nature of these teams to be constantly improving would seem to be an ideal arrangement for satisfying those success requirements.

References

Austenfeld, R. B., Jr. (1994, September). Total Quality Management and Its Implementation at a Large Aerospace Company. *Papers of the Research Society of Commerce and Economics — Hiroshima Shudo University*, pp. 121–153.

Austenfeld, R. B., Jr. (1996, March). Benchmarking. *Papers of the Research Society of Commerce and Economics — Hiroshima Shudo University*, pp. 161–186.

Chang, R. Y. & Curtin, M. J. (1994). *Succeeding as a Self-Managed Team: A Practical Guide to Operating as a Self-Managed Work Team.* Irvine, CA: Richard Chang Associates, Inc.

Covey, S. R. (1989). *The 7 Habits of Highly Effective People: Restoring the Character Ethic.* New York: Simon and Schuster.

Getting in Sync. (1990, February 22). A "White Paper" published within Douglas Aircraft Company by the Quality Systems, Processes and Procedures section.

LBL Consulting, Inc. (1999) home page (www.lblconsulting.com) under "Articles."

OnePine Consulting (1999) home page (www.onepine.demon.co.uk) under "Group

21) The FEL–PRO company was named "Employer of the Year" by the Management Association of Illinois in 1991 and named one of the top ten companies to work for in the book *The 100 Best Companies to Work For in America* (1993).

Robert B. Austenfeld, Jr.: Self-Directed Work Teams — The Ultimate Empowerment Dynamics."

Rollo, J. (1995). *Techniques of Successful Self-Directed Work Teams.* Sarasota, FL: Competitive Advantage Consultants, Inc.

Scholtes, P. (1988). *The Team Handbook.* Madison, WI: Joiner Associates.

Tague, N. R. (1995). *The Quality Toolbox.* Milwaukee, WI: Quality Press.

Wellins, R. S., Byham, W. C., & Wilson, J. M. (1991). *Empowered Teams: Creating Self-Directed Work Groups That Improve Quality, Productivity, and Participation.* San Francisco: Jossey-Bass.

APPENDIX A

EXAMPLE OF A MISSION/VALUES STATEMENT

(for the I/N Tex company; from Wellins, et al., 1991, page 90)

I/N Tek Mission

The I/N Tek mission is to produce the most marketable cold-reduced products sold in the United States, maintaining the highest standards in quality, cost, and consumer satisfaction through the integration of human resources, equipment, technology, and business systems while providing secure and satisfying employment and an attractive return to investors.

I/N Tek Values

Quality Focus

We will commit our individual abilities and team efforts to achieve the highest-quality results in all aspects of personal performance, the productive process, and all functions of the organization.

Customer Orientation

We will seek out and satisfy our customers' needs and constantly strive to exceed their expectations. We recognize that the quality of our products has a powerful impact on our customers' manufacturing process and the quality of their products.

Constant Improvement *(Kaizen)*

We will continually strive to find better ways to do our work and to grow as individuals.

Participation and Involvement

We will seek input to find the best solutions to problems and methods of making improvements in the workplace. We will share information, resources, and ideas, and we will develop the skills necessary to maintain an exciting work environment where decisions are made at the lowest appropriate level.

People Focus

We will ensure a cooperative partnership among all members of I/N Tek in a framework built on mutual trust, respect, and a sense of dignity. We will provide opportunities for all employees to reach their maximum potential and to experience more secure and satisfying employment in a safe and healthy environment.

Cost Consciousness

We will continually improve operating efficiency and reduce costs based on the recognition that every action we take can influence external as well as internal costs.

APPENDIX B — page 1 of 4

TEAM READINESS SURVEY

(Wellins, et al., 1991, pages 95–98)

Team Readiness Survey

Question: When does it make sense to start work teams in your organization?

Answer: When the conditions are right.

To help you determine how conducive your organization is to the implementation of teams, you might want to give some thought to key situational issues. Using the scale below each item, give yourself a "5" for *yes* (if you strongly agree with the item), a "1" for *no* (if you strongly disagree with the item), or a "2," "3," or "4" depending on how close you are to either end of the scale. When you are finished, total your scores for an indication of your organization's readiness to accept work teams.

1. Management believes that front-line employees can and should make the majority of decisions that affect how they do their work.

1 2 3 4 5

Strongly Disagree — Strongly Agree

2. Employees can suggest and implement improvements to their work without going through several levels of approval.

1 2 3 4 5

Strongly Disagree — Strongly Agree

3. The union is likely to agree to renegotiate traditional work rules and job classifications to permit greater flexibility and autonomy.

1 2 3 4 5

Strongly Disagree — Strongly Agree

4. The nature of the work in your organization lends itself to a team-based approach rather than to individual effort.

1 2 3 4 5

Strongly Disagree — Strongly Agree

APPENDIX B (continued) — page 2 of 4

TEAM READINESS SURVEY

(Wellins, et al., 1991, pages 95–98)

5. Your technology is flexible enough to permit restructuring or reorganization based on the needs of your teams. The physical design of your workplace lends itself to working in teams.

1 2 3 4 5

Strongly Disagree Strongly Agree

6. It is possible to organize work so that teams of employees can take responsibility for entire jobs.

1 2 3 4 5

Strongly Disagree Strongly Agree

7. There is enough complexity in jobs to allow for initiative and decision making.

1 2 3 4 5

Strongly Disagree Strongly Agree

8. Your employees would be interested or willing to organize into teams.

1 2 3 4 5

Strongly Disagree Strongly Agree

9. Your overall organizational culture, vision, and values support teamwork and empowerment.

1 2 3 4 5

Strongly Disagree Strongly Agree

10. Your organization has a history of following through on initiatives such as empowerment.

1 2 3 4 5

Strongly Disagree Strongly Agree

APPENDIX B (continued) — page 3 of 4

TEAM READINESS SURVEY

(Wellins, et al., 1991, pages 95–98)

11. Management in your organization is willing to adjust responsibility downward and radically change its own roles and behavior.

1 2 3 4 5
Strongly Disagree Strongly Agree

12. Your company is secure enough to guarantee a period of relative stability during which the teams can develop.

1 2 3 4 5
Strongly Disagree Strongly Agree

13. You have adequate support functions, such as human resources, engineering, and maintenance, that can help teams by providing information, coaching, and training.

1 2 3 4 5
Strongly Disagree Strongly Agree

14. Management understands that developing teams is a lengthy, time-consuming, and labor-intensive process. It is willing and able to make the investment.

1 2 3 4 5
Strongly Disagree Strongly Agree

15. Your organization has systems that provide timely information to front-line employees.

1 2 3 4 5
Strongly Disagree Strongly Agree

APPENDIX B (continued) — page 4 of 4

TEAM READINESS SURVEY

(Wellins, et al., 1991, pages 95–98)

16. Your employees have the skills needed to take greater control of their jobs.

1	2	3	4	5
Strongly Disagree				Strongly Agree

17. You are willing to invest in training your front-line employees.

1	2	3	4	5
Strongly Disagree				Strongly Agree

Your Total Score: _____

Score*	Actions*
Above 65	You are on solid ground. Teams stand a good chance of taking root if properly implemented.
Between 40 and 64	There are some weaknesses in your culture's policies, processes, and procedures. Try to work on the weak areas before going ahead with a team implementation.
Below 40	Teams will have difficulty taking hold. You need to reexamine your culture and possibly explore a more gradual course toward empowerment before implementing self-directed teams.

*Scores/Actions are guidelines only. Questions do not carry equal weight in every organization.

APPENDIX C - page 1 of 2

FLOW CHART EXAMPLE

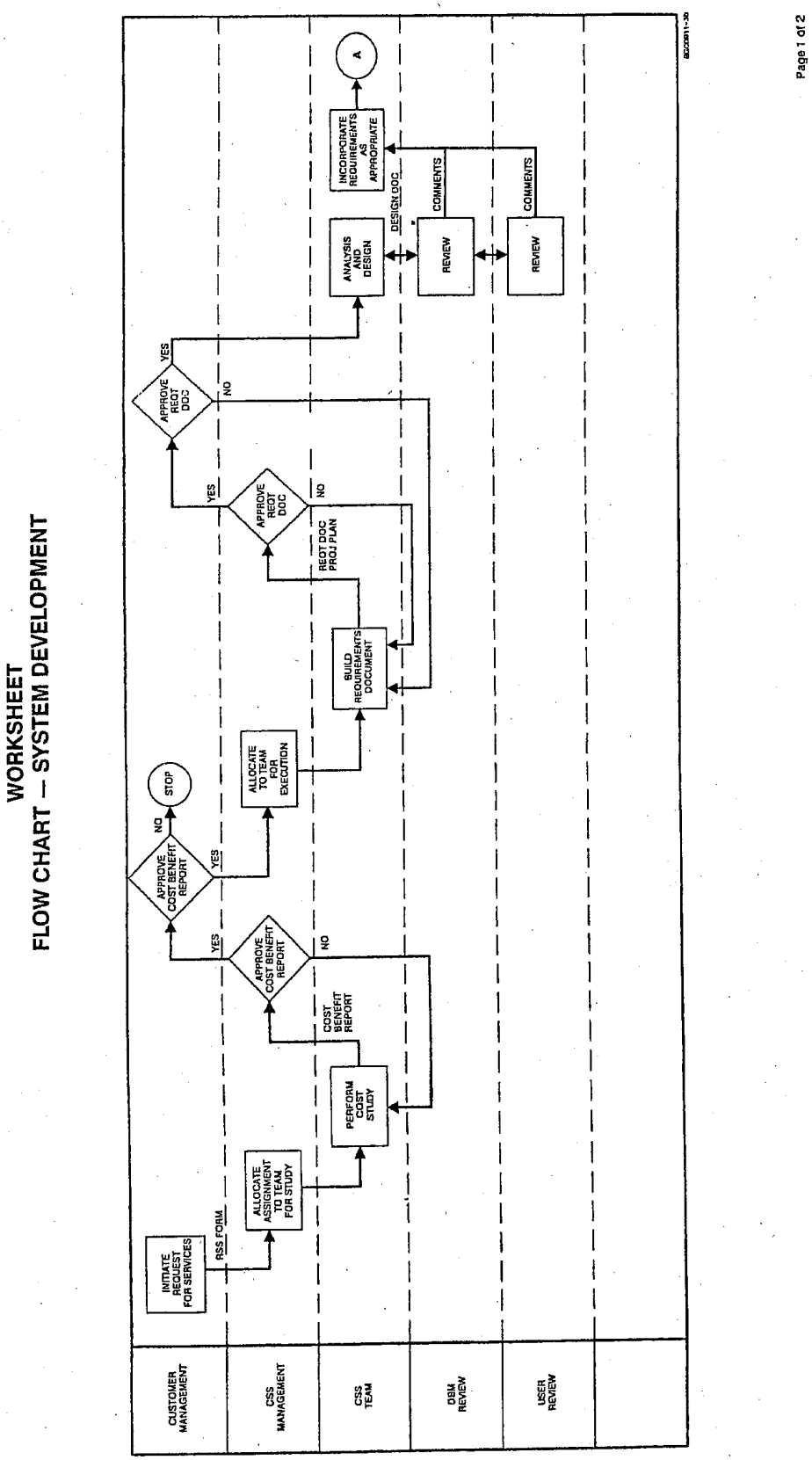

APPENDIX C (continued) — page 2 of 2

FLOW CHART EXAMPLE

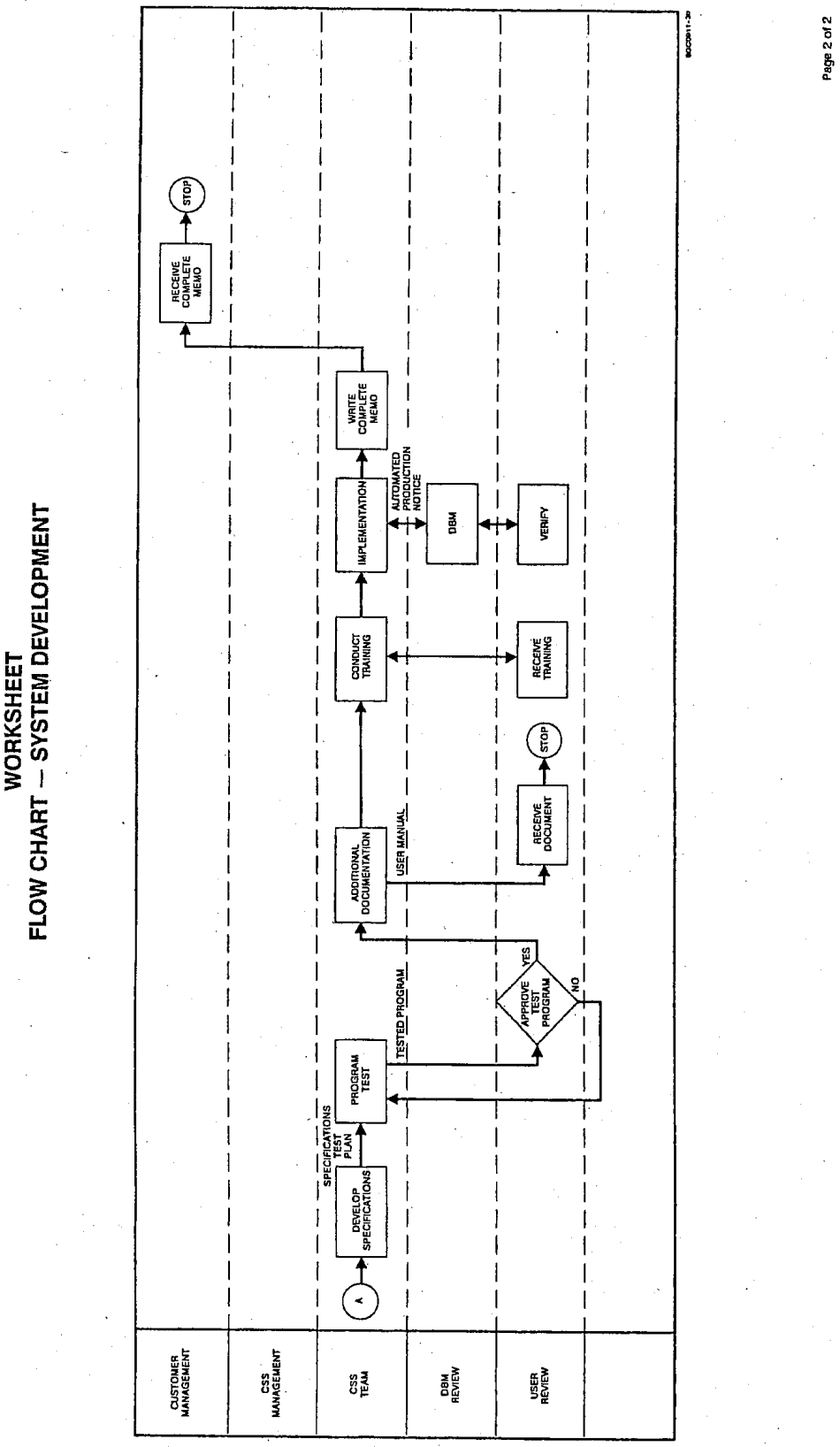

APPENDIX D — page 1 of 4

EXAMPLE OF A TRAINING PLAN

(Wellins, et al., 1991, pages 178–181)

Sequential Steps for Effective Team Training
BEFORE TEAM START-UP

Time Frame	Managers, Group Leaders, and Key Support Members	Team Leaders	Team Members
12 months before	Facilitated agreement on mission, vision, and values for the line	(Not yet selected)	(Not yet selected)
11 months before	Project planning and implementation training		
10 months before	Team-building activity Management team development planning		
8 months before	Team-building activity		
6 months before	Selection skills training Empowerment training Leadership and influence training		
5 months before	Group leadership training	Orientation: • Mission, vision, and values • Role clarity • Expectations and objectives • Personal development planning • Basic interaction skills training	
4 1/2 months before	Developing organizational talent training (to agree on development plans for team leaders)	Technical training on new equipmentand processes, interspersed with team-building activities	

APPENDIX D (continued) — page 2 of 4

EXAMPLE OF A TRAINING PLAN

(Wellins, et al., 1991, pages 178–181)

3 months before	Encouraging initiatives training (to help team leaders actually implement an improvement)	Action skills training: • Analyzing customer requirements • Identifying root causes • Exploring alternatives • Implementing improvements • Evaluating projects	
2 1/2 months before	— Joint Team-Building Activity —		
2 months before		Selection skills training	
1 monthe before		Facilitator training: • Coaching • Reinforcing	
3 weeks before		Job skills training	Orientation: • Mission, vision, and values • Expectations • Personal development planning • Basics of working in teams
2 weeks before		Leading meetings	Technical training on new equipment and processes, interspersed with basic in-ter-action skills training
1 week before	— Joint Team-Building Activity —		

APPENDIX D (continued) — page 3 of 4

EXAMPLE OF A TRAINING PLAN

(Wellins, et al., 1991, pages 178–181)

AFTER TEAM START-UP

Time Frame	Managers, Group Leaders, and Key Support Members	Team Leaders	Team Members
5 weeks after		Encouraging initiatives	Meetings skills: participating and leading
6 weeks after		(Team leaders deliver action skills training within their own teams)	Action skills training: analyzing customer requirements
7 weeks after			Action skills training: identifying root causes
8 weeks after		Valuing differences	Action skills training: exploring alternatives
9 weeks after			Action skills training: implementing improvements
9 to 14 weeks after		(Team leaders provide coaching and reinforcement)	(Team members actually implement their planned improvement)
14 weeks after			Action skills training: evaluating the project
16 weeks after		• Performance planning and feedback training (followed by actually setting process and results objectives) • Team development and diagnosis	

APPENDIX D (continued) — page 4 of 4

EXAMPLE OF A TRAINING PLAN

(Wellins, et al., 1991, pages 178–181)

4 months after	— Renewal Activity —		
5 months after	Leadership team assesses its performance	(Team leaders prepare to deliver additional training	Gaining team agreement
6 months after			Assessing team performance
1 year after	— Renewal Activity —		
1 year to 18 months after			Team members start to pursue their own needs and interests: making presentations, budgeting, etc.
18 months after	— Refresher Training in Leadership Skills —		
18 months to 2 years after		Team leaders support team members; prepare to deliver additional training	Refresher training in basic interaction skills, including handling conflict, influencing others, and supporting others
2 years after	— Renewal Activity —		

APPENDIX E

EXAMPLE OF A JOB DIMENSION

(Wellins, et al., 1991, pages 146)

SAMPLE DIMENSION: TEAMWORK

The Teamwork dimension is defined as "active participation in, and facilitation of, team effectiveness; taking actions that demonstrate consideration for the feelings and needs of others; being aware of the effect of one's behaviors on others."

Active cooperation by every member is vital to team success. Team members cannot sit back and observe or allow others to do the work; they must work proactively to achieve group goals and facilitate cohesiveness.

Effective teams are not just collections of people. Rather, they comprise an entity that is greater than the sum of its parts. This means that team members must work together closely and make every effort to cooperate with and support one another.

Key behaviors of the Teamwork dimension include the following:

- **Asking for ideas**
- **Offering help without being asked**
- **Accepting suggestions**
- **Taking into consideration the needs, motivations, and skills of other team members when offering help or advice**
- **Working with other team members to solve a problem**
- **Recognizing and considering others' ideas**

APPENDIX F

EXAMPLE OF A CROSS-TRAINING PLAN

(Wellins, et al., 1991, pages 182)

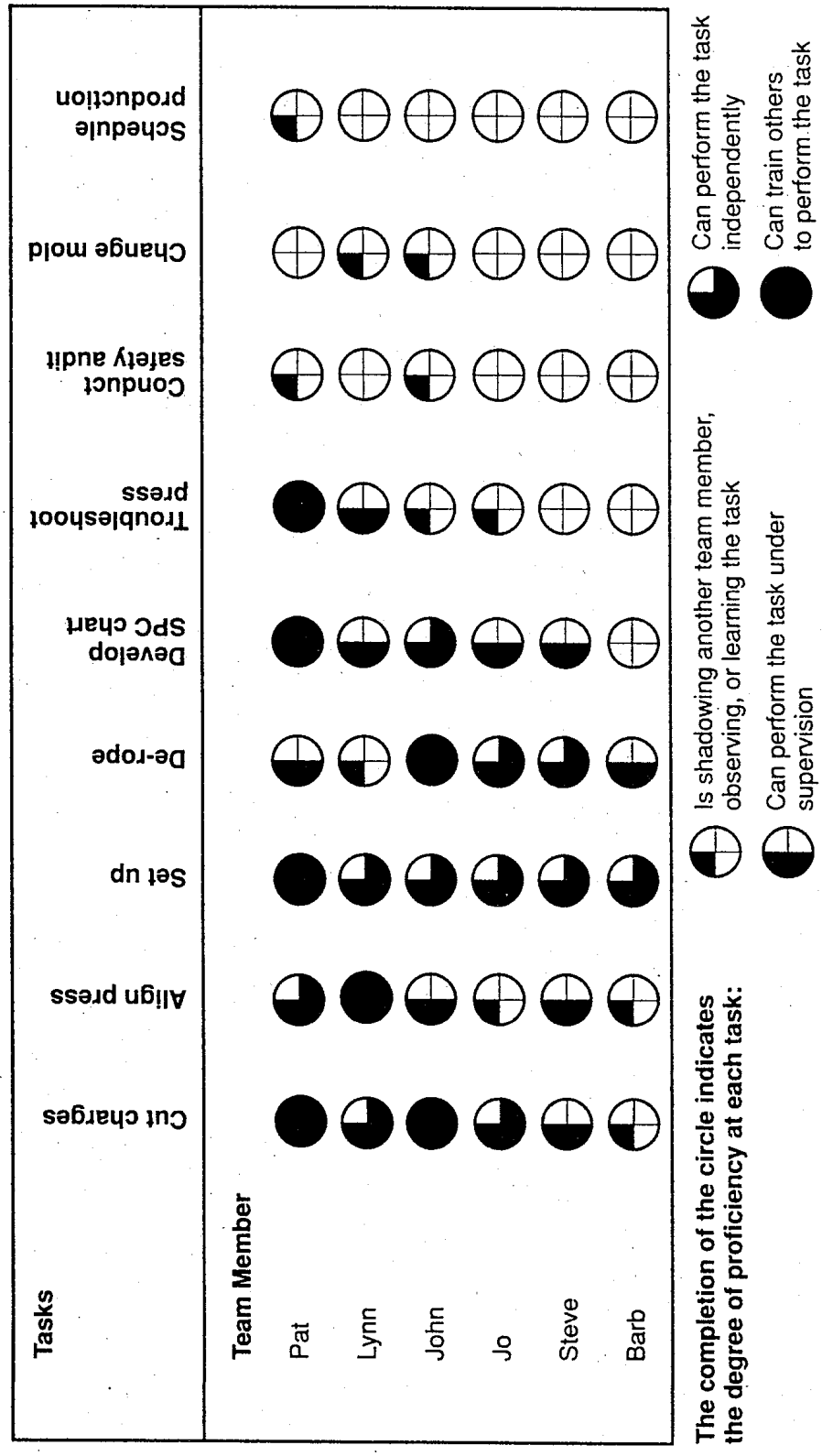

APPENDIX G — page 1 of 2

TUCKMAN'S FOUR STAGES OF TEAM DEVELOPMENT

(http://www.onepine.demon.co.uk/mgrp.htm)

B. W. Tuckman addressed how groups change over time and his model is seen as the basis for examining group stages. All groups go through a series of stages of development before performing in a fully mature and effective manner and a team develops from individuals through a series of stages in accordance with the shared experiences of its members. He identified four stages of team development that have been adopted by other researchers.

Forming: The group is not yet a group, simply a collection of individuals. At this stage, the purpose of the group is discussed along with its title, composition, leadership and life-span. Individuals will be keen to establish their personal identities in the group and make some impression on others. Important mechanisms include developing trust, finding similarities, setting up "rules" and norms, "contracting" with group members, finding out if "this is the group for me" etc. attraction bonds, orientation to others, dependency, inclusion. Team members become acquainted with each other, information is exchanged. They determine each team member's strengths and assign roles and responsibilities.

Storming: Most groups go through a stage of conflict following the initial, often false, consensus. Purpose, leadership, roles and norms may all be challenged. Hidden agendas may be revealed, and some interpersonal hostility is to be expected. If successfully handled, storming leads to the formulation of more realistic objectives, procedures and norms. This stage is particularly important to the formation of trust within the group even though it is characterized by dissatisfaction, competition, conflict, fight, counterdependency. Members jockey for position, become aware of their differences and try to determine how they will work together.

Norming: The group establishes norms and patterns of work within which it functions. There will be a lot of tentative experimentation by individuals testing the temperature of the group and establishing their levels of commitment — development of structure, increased harmony.

APPENDIX G — page 2 of 2

TUCKMAN'S FOUR STAGES OF TEAM DEVELOPMENT

(http://www.onepine.demon.co.uk/mgrp.htm)

A group consensus emerges, it comes to an agreement on its purpose or function. Members are clear what their roles and responsibilities are. The group has a sense of identity and members strive to work together.

Performing: Only when the previous three stages have been successfully completed will the group reach optimum performance level. Achievement orientation, productivity, group structure, norms, and behavior are understood and accepted, members know how to work with each other. They can handle disagreements and misunderstandings effectively. The group is focused on accomplishing its purpose.

Refs:

Tuckman, B. W. (1965). Developmental sequences in small groups. *Psychological Bulletin*, 63, 384–399.

Tuckman, B. W. & Jensen, M. A. C. (1977). Stages of small group development revisited. *Group and Organizational Studies*, 2, 419–427.